PLA 1001 - Actuator base set
PLA 1002 - Actuator extension set

EN	Mounting instructions	IT	Istruzioni di montaggio	RU	Инструкция по сборке и установке	RO	Instrucțiuni de montaj
DE	Montageanleitung	PT	Manual de montagem	CZE	Návod k montáži	UK	Вказівки по монтажі
FR	Consignes d'installation	EL	Οδηγίες συναρμογής	SK	Návod na montáž	BG	Инструкции за монтаж
NL	Montagevoorschrift	SV	Montageföreskrifter	HU	Szerelési előírás	JA	設置の説明書
ES	Instrucciones de montage	PL	Instrukcja montażu	TR	Montaj kılavuzu	ZH	装配说明

ISO 9001 : 2008 CERTIFIED

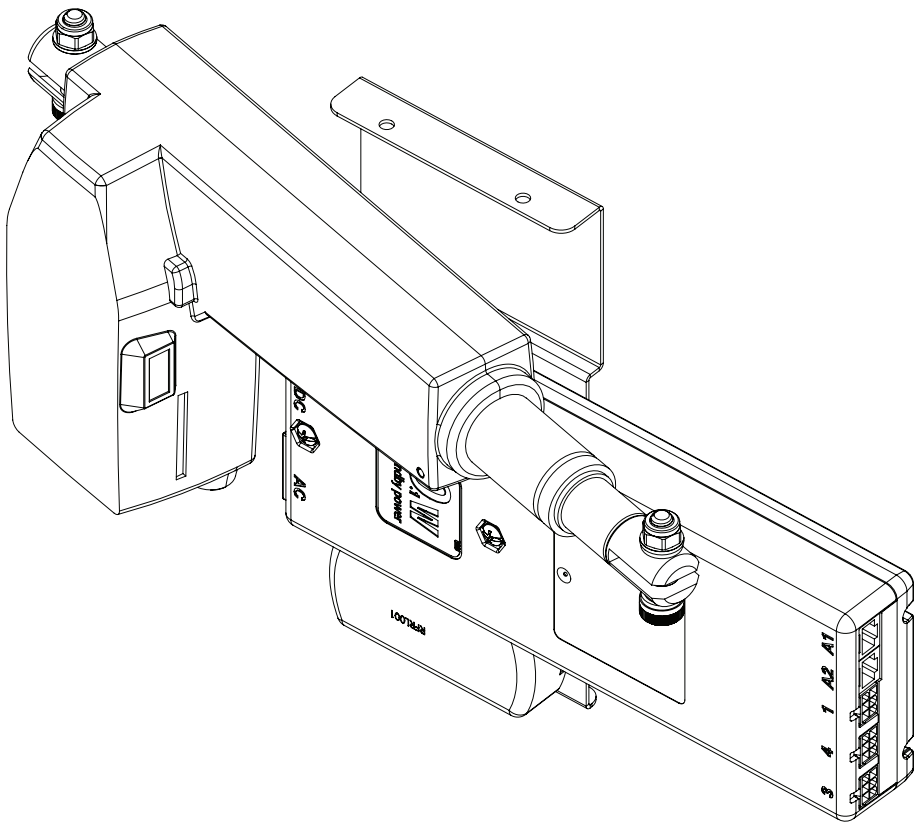

Included Components:

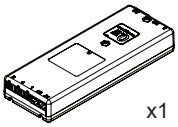
x1
Control Box

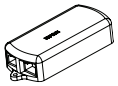
x1
IR Receiver

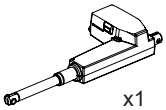
x1
Actuator

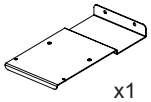
x1
Control Box Bracket

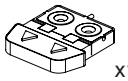
x1
DPA

x2
M5 x 40mm Screw

x2
M3 x 8mm Screw

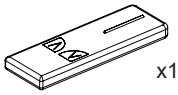
x1
IR Remote

x2
M8 Nylon Nut

x1
M5 Allen Key

x1
Connector Cable

x2
M5 x 10mm Screw

x2
Shoulder Bolt Screw

x2
M8 Washer

x1
IR Cable

x1
Power Cord

1

Remove the latches located on the bottom corners of the mount before installing the actuators.

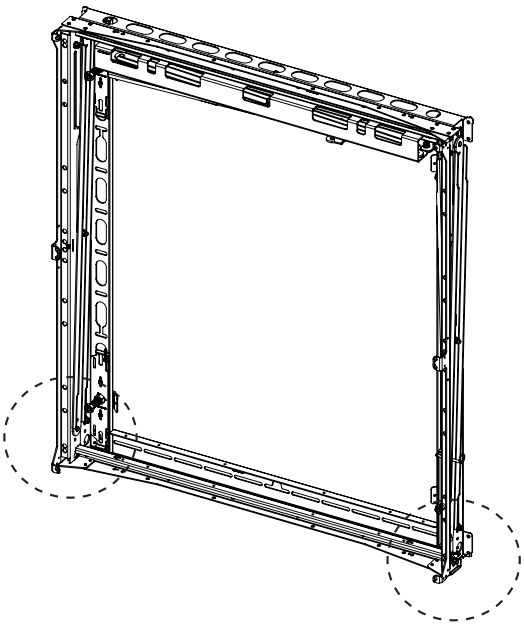

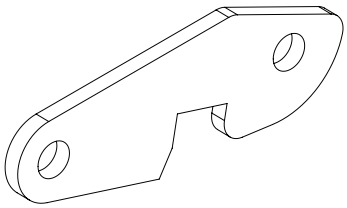
Latch

2

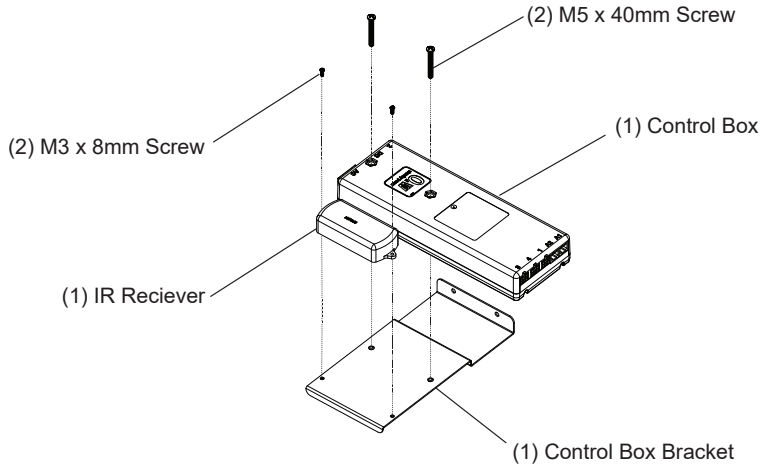
(2) M5 x 40mm Screw
(2) M3 x 8mm Screw
(1) Control Box
(1) IR Reciever
(1) Control Box Bracket

3

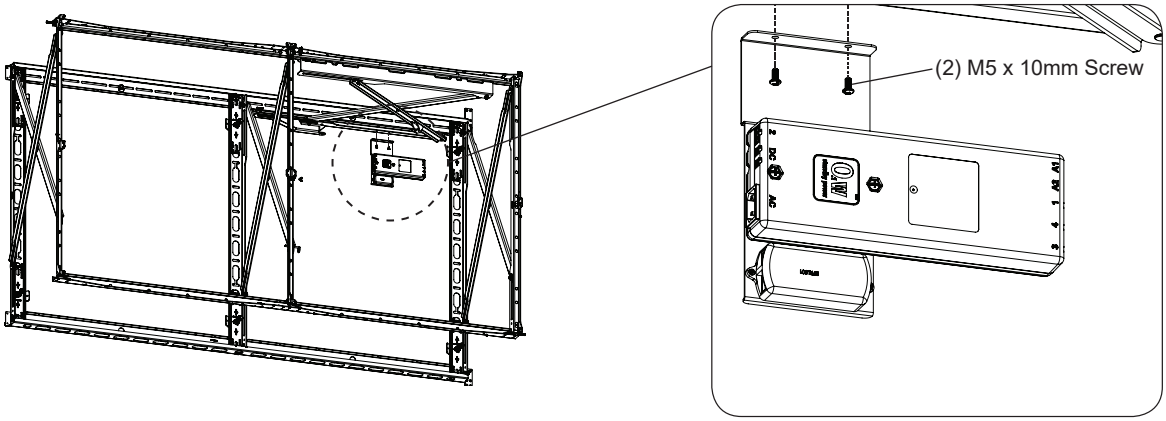
(2) M5 x 10mm Screw

4

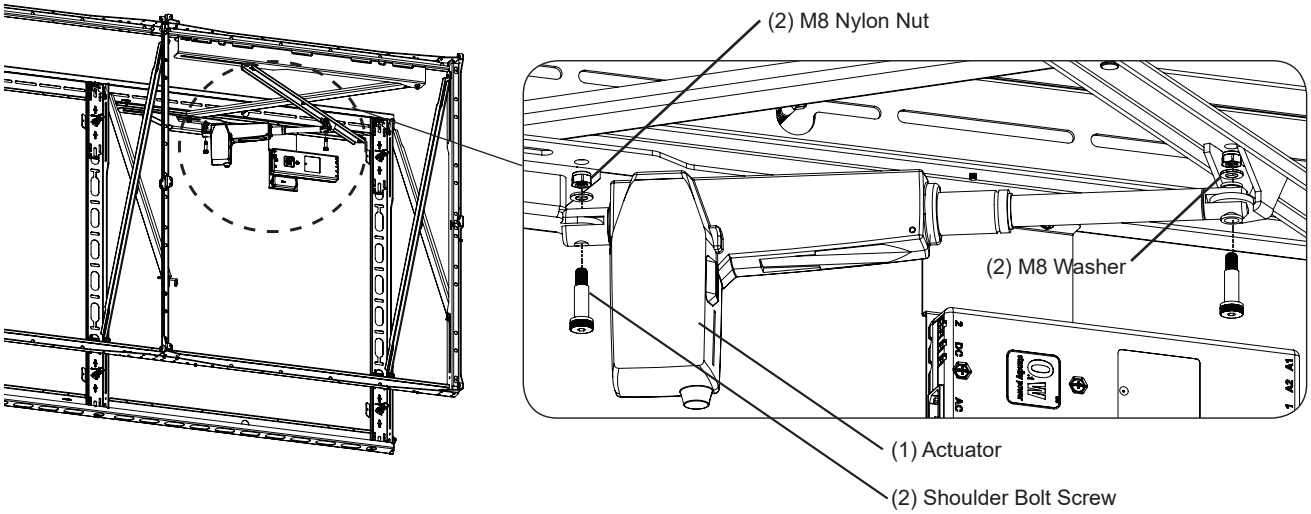
(2) M8 Nylon Nut
(2) M8 Washer
(1) Actuator
(2) Shoulder Bolt Screw

5 Connecting the Actulator to the Control box

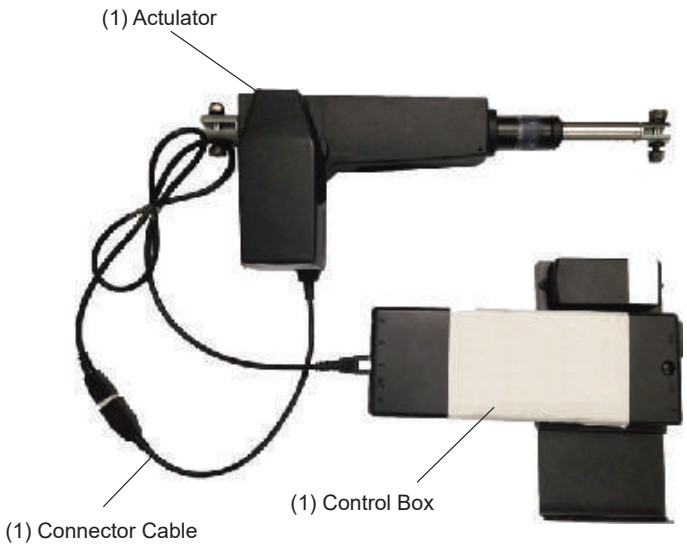

PLA 1001: Connect the Connector Cable to plug 1 on the control box.

PLA 1002: Connect the second motor to plug 2 and the third motor to plug 3.

6 Connecting the IR Receiver to the Control Box

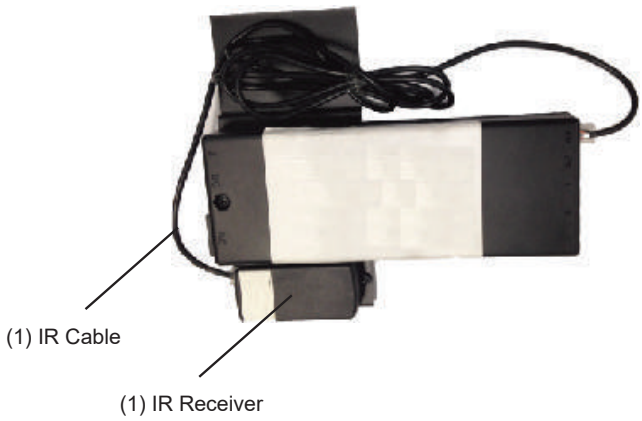

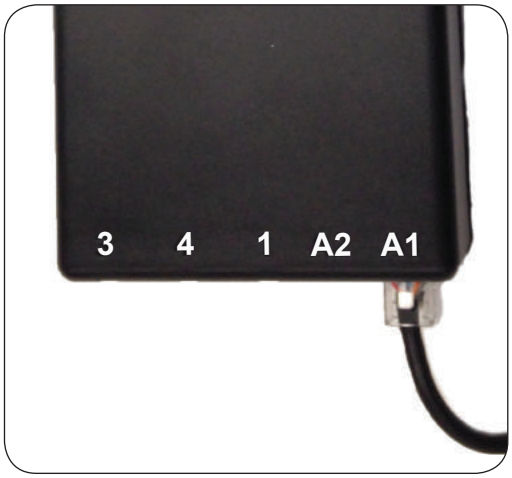

Connect the IR Cable to plug A1 on the control box. Using the IR Receiver activates the IR Remote.

7 Connecting the DPA to the Control box

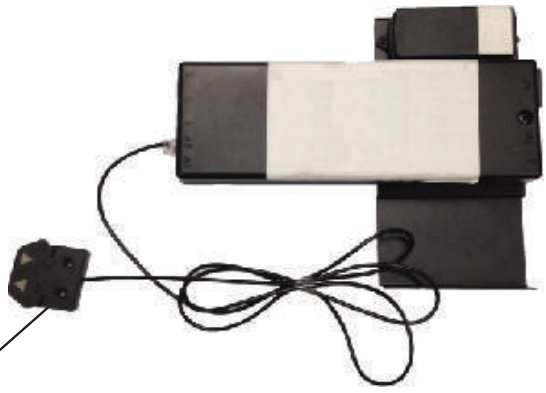

(1) DPA

Connect the DPA to plug A2 on the control box.

8 Powering up the Control box

Connect the Power Cord to plug AC on the control box.

9 Looping the control boxes

The control boxes can be linked together. Add a cable between the control boxes.