PLW 1004 - 2x3 LED video wall mount

EN	Mounting instructions	IT	Istruzioni di montaggio	RU	Инструкция по сборке и установке	RO	Instrucțiuni de montaj
DE	Montageanleitung	PT	Manual de montagem	CZE	Návod k montáži	UK	Вказівки по монтажі
FR	Consignes d'installation	EL	Οδηγίες συναρμογής	SK	Návod na montáž	BG	Инструкции за монтаж
NL	Montagevoorschrift	SV	Montageföreskrifter	HU	Szerelési előírás	JA	設置の説明書
ES	Instrucciones de montage	PL	Instrukcja montażu	TR	Montaj kılavuzu	ZH	装配说明

GUARANTEE 5 YEAR GUARANTEE

ISO 9001 : 2008 CERTIFIED

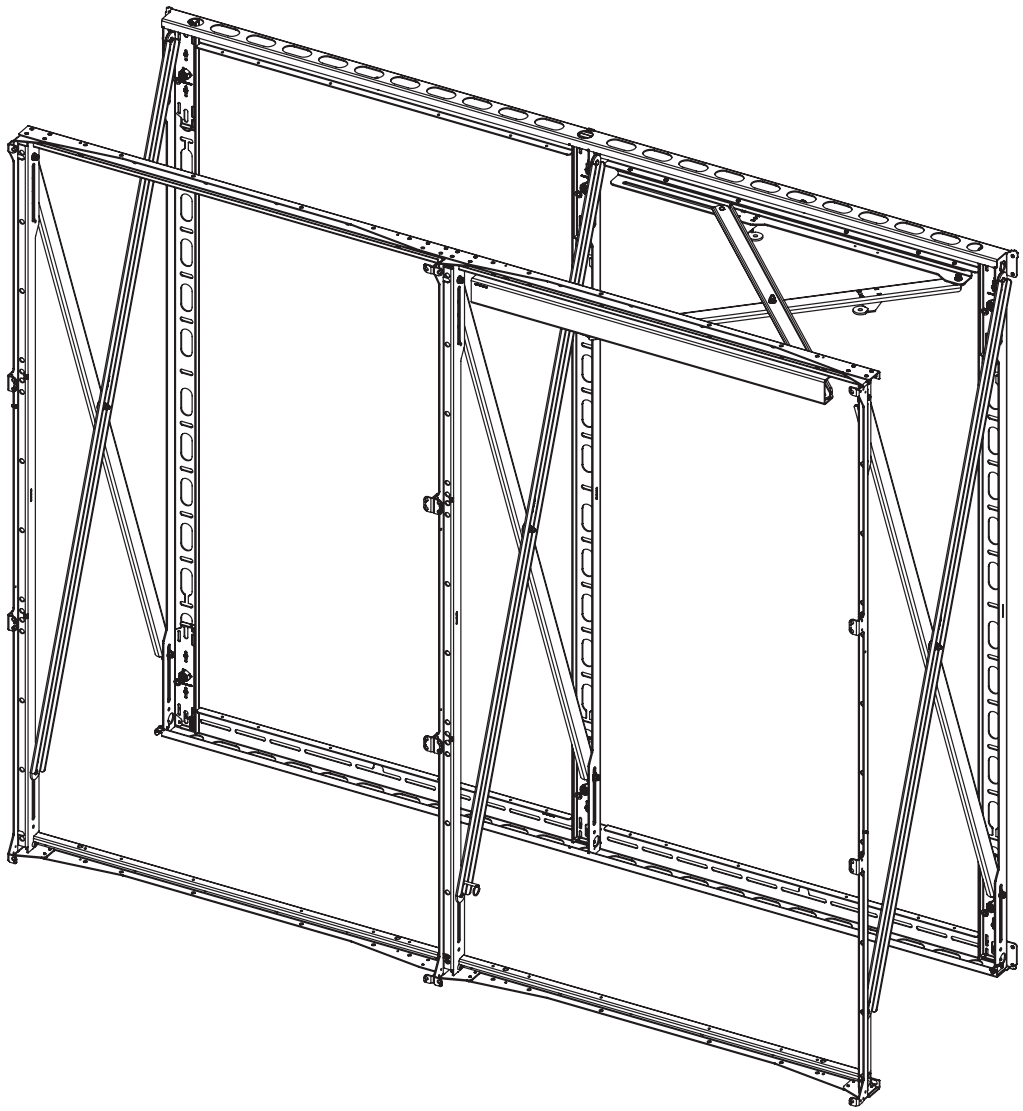

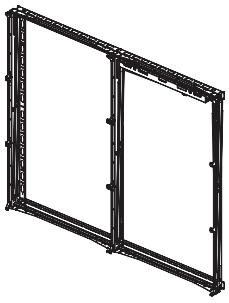

x1

Wall Mount

A

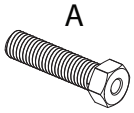

x6

5/8”-10 x 2” Bolt with hole

B

x6

5/16” x 6” Lag Bolt

C

x8

5/16” Washer

D

x2

5/16” x 3” Lag Bolt

E

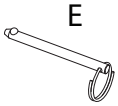

x1

1/4” x 2 1/2” Push Pin

F

x24

M6 x 20 mm Socket Cap

G

x1

M2 Allen Key

H

x1

M5 Allen Key

I

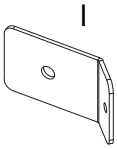

x6

Wall Plate

J

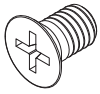

x8

M5 x 6 mm Flat Head Screw

K

x6

M5 x 10 mm Screw

L

x24

M4 x 6 mm Set Screw

M

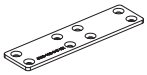

x2

Spacer Bracket

N

x4

M6 x 16 mm Flat Socket Head Screw

O

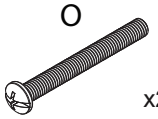

x2

M8 x 70 mm Screw

P

x1

5/32” Allen Key

1

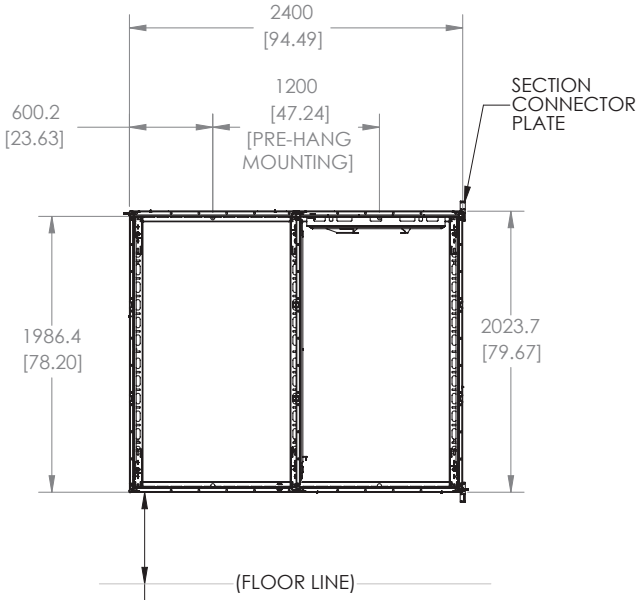

(FLOOR LINE)

TO DETERMINE THE POSITION OF THE PRE-HANGER SCREW
FIRST MEASURE THE DISTANCE REQUIRED FROM THE FLOOR
TO THE BOTTOM EDGE OF THE FRAME AND ADD 1986.4 mm [78.20"]

1) Find your desired mounting location.
2) Drill the 5/16” x 3” lag bolt (D) with washer (C) into the wall

Do not fully drill 5/16” x 3” lag bolt into the wall. Leave 25 mm [1” inch] out.

2

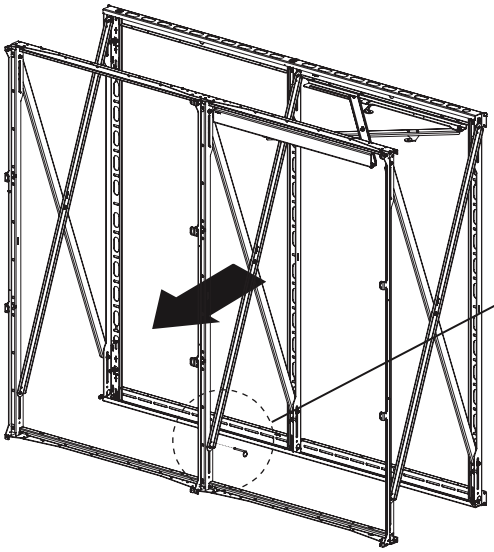

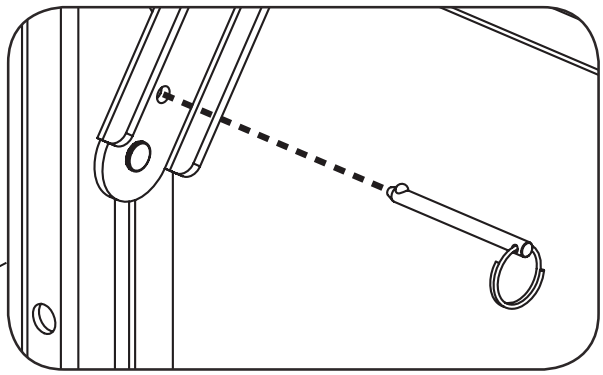

1) Extend the mount.
2) Install the 1/4”x 2 1/2” Push Pin (E) to keep the mount extended.

3

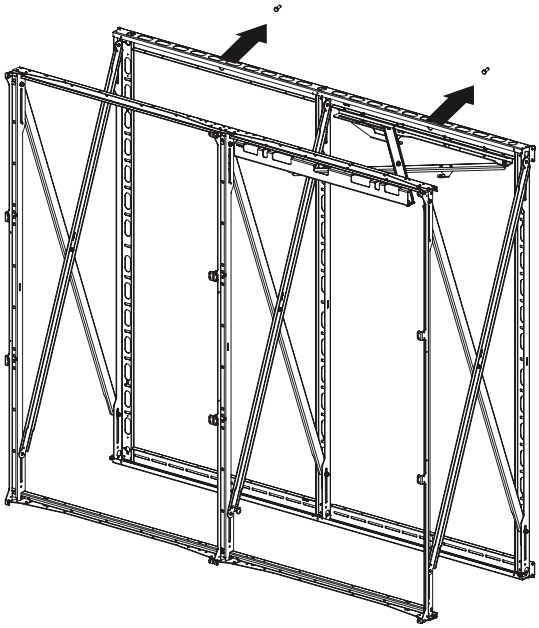

Key Slot

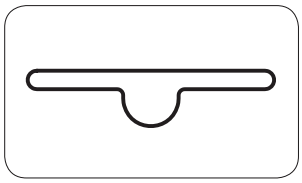

Place the wall mount over the lag bolt (D) through the key slot hole.

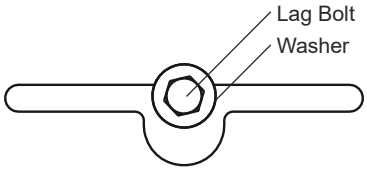

4

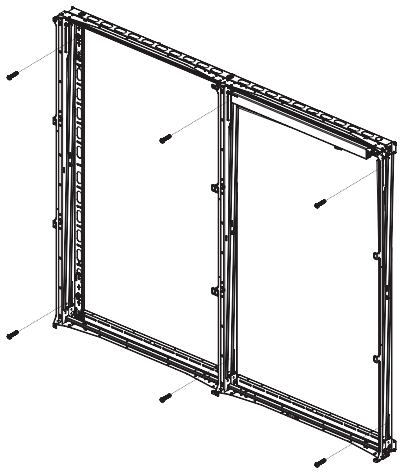

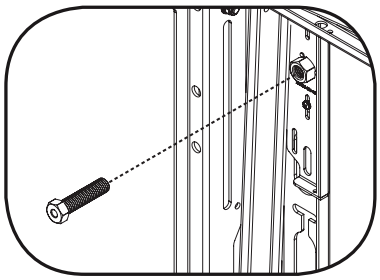

Flush Bolt

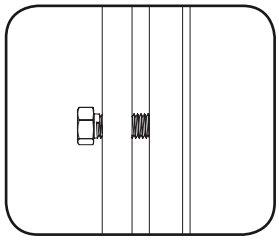

Install the six (6) 5/8”-10 x 2” Bolt (A) with hole into the wall mount.

5

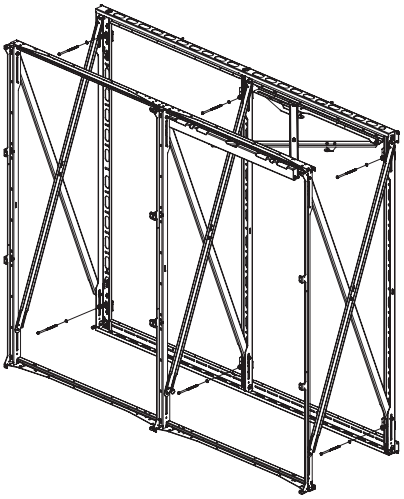

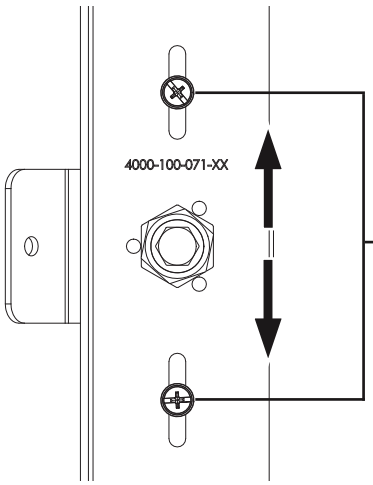

Before installing the 5/16” x 6” lag bolt (B) and washer (C) make sure the phillips screw is in the center of the slots. This will give 1/2” adjustments either up or down.

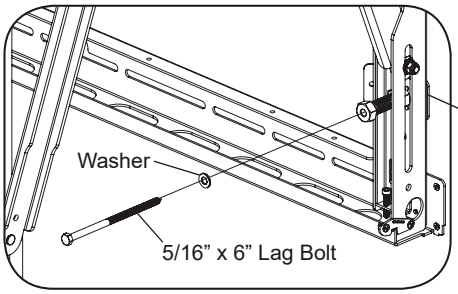

Wall Bracket

1) Level the wall mount.
2) Place the wall bracket (I) between the wall mount and wall.
3) Secure the mount into the wall using six (6) 5/16” x 6” lag bolts (B) and six (6) 5/16” washers (C) into the 5/8”-10 x 2” Bolt with hole.

6

Adjustments

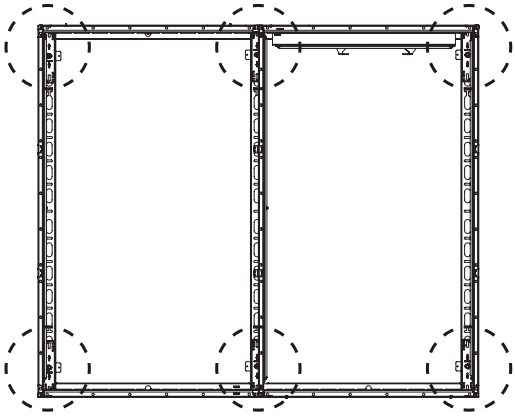

In / Out

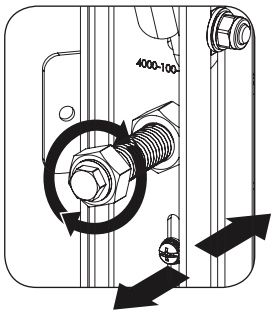

Uneven wall surfaces can be adjust by turning the 5/8”-10 x 2 Bolt with hole.

Up / Down

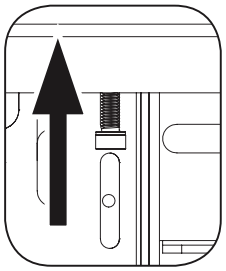

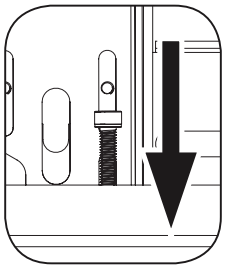

7

Note: If using the additional slots for mounting points, make sure that the floating frame is fully level to the wall vertically and horizontally. Must use shims (commercially available) on every slots being used to fill the void between the wall and the frame. Avoid over tightening the screws as this would make the floating frame uneven.

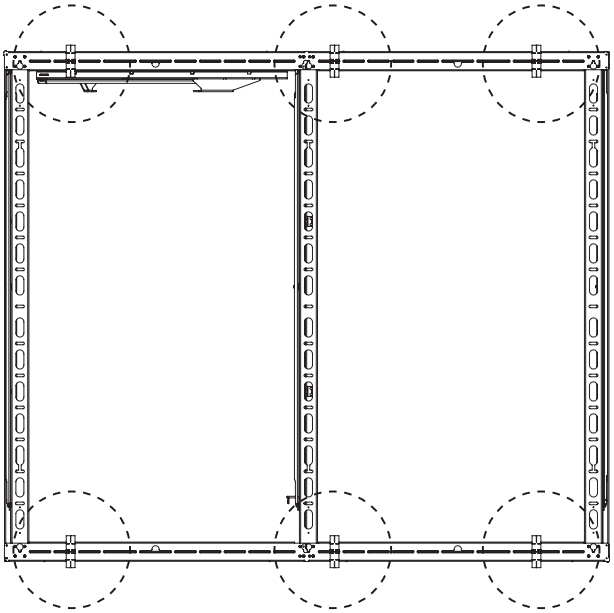

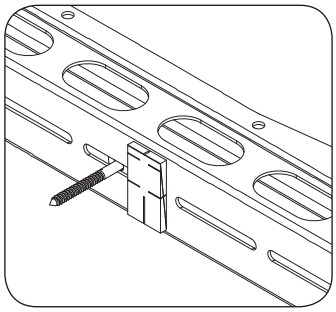

8

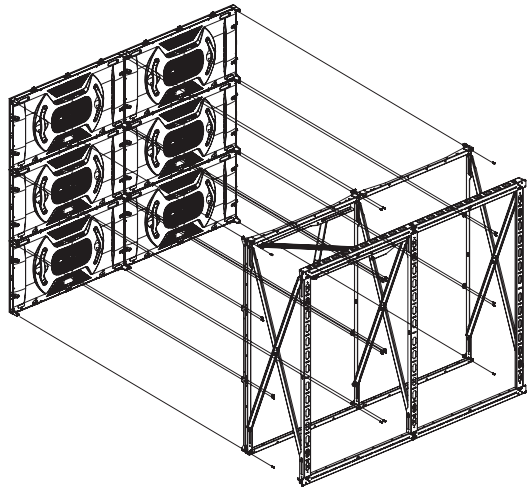

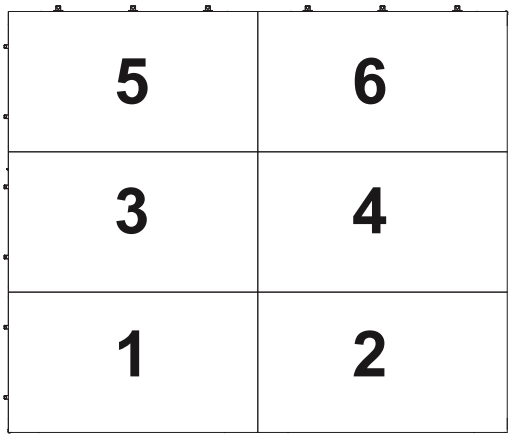

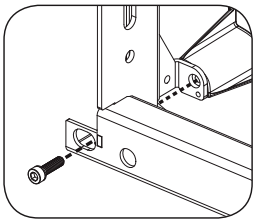

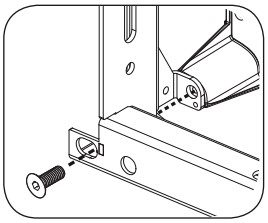

1) Use four (4) M6 x 16 mm flat socket head screws (N) on the first LED display to center it in place.
2) Install the second and third LED display unsing four (4) M6 x 20 mm socket cap screw in each LED display (F).
3) Optional to change the M6 x 16 mm flat socket head screws (N) to M6 x 20 mm socket cap screws (F).
4) Install the LED panels in the following order as shown above.

9

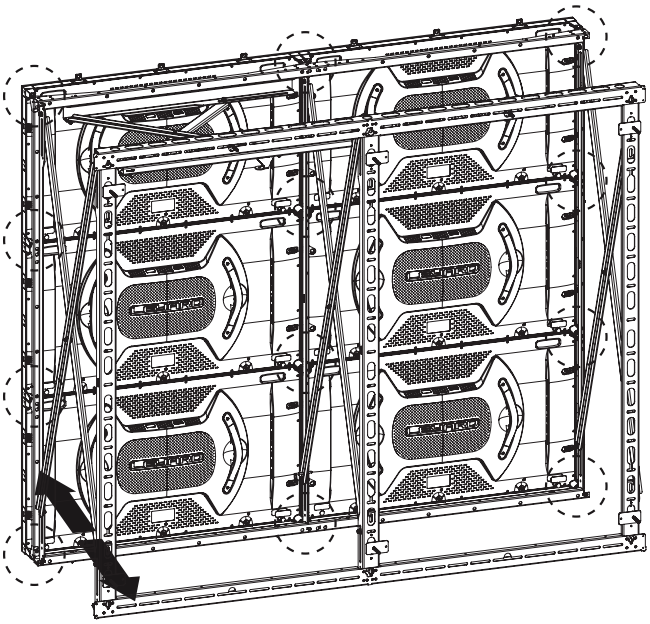

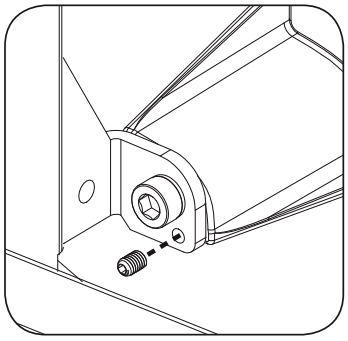

Install twenty four (24) M4 x 6 mm set screws (L). You can adjust the panel in & out by using the M2 Allen key (G).

OPTIONAL EXTENSIONS

10

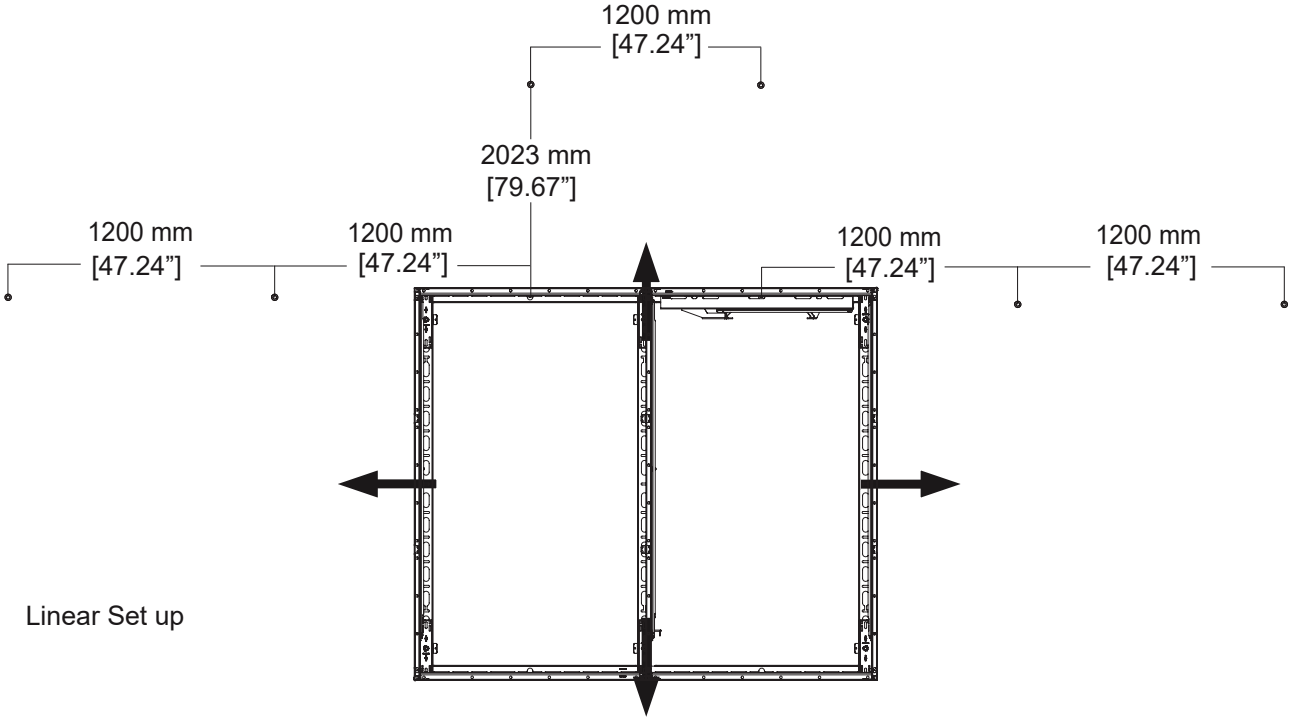

Linear Set up

11

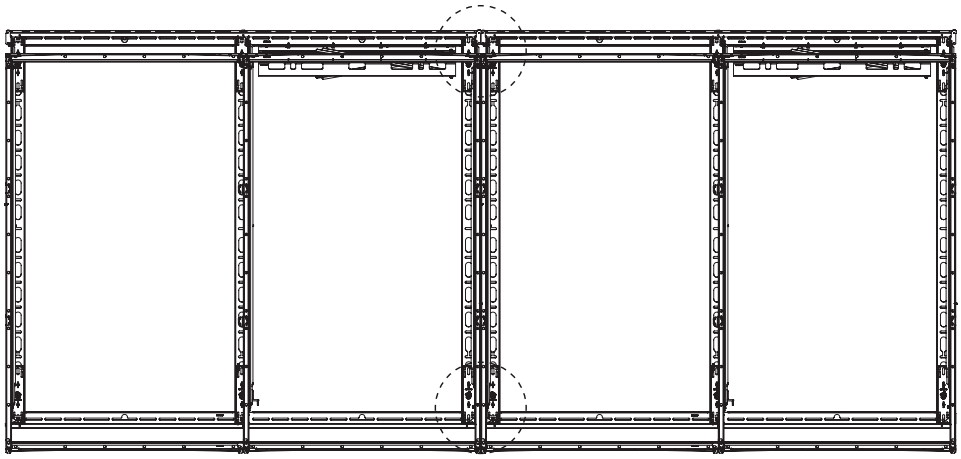

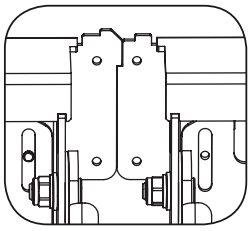

Align the tabs with eachother.

12

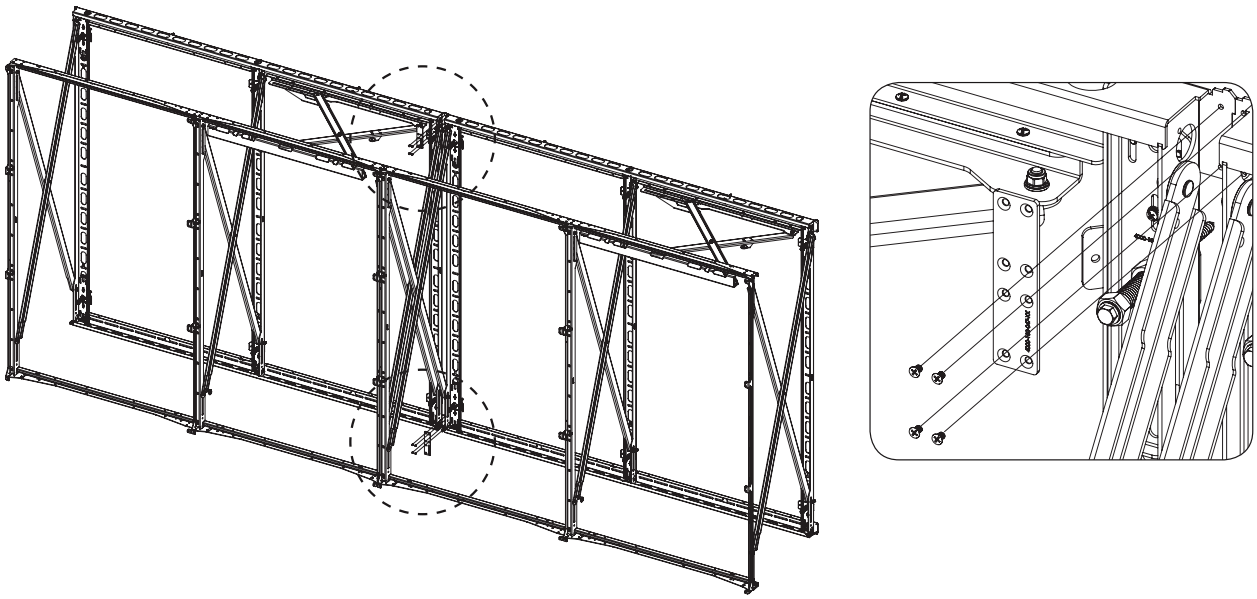

Install the spacer brackets (M) to the mount using (8) M5 x 6 mm flat head screws (J).
Four (4) screws per bracket.

13

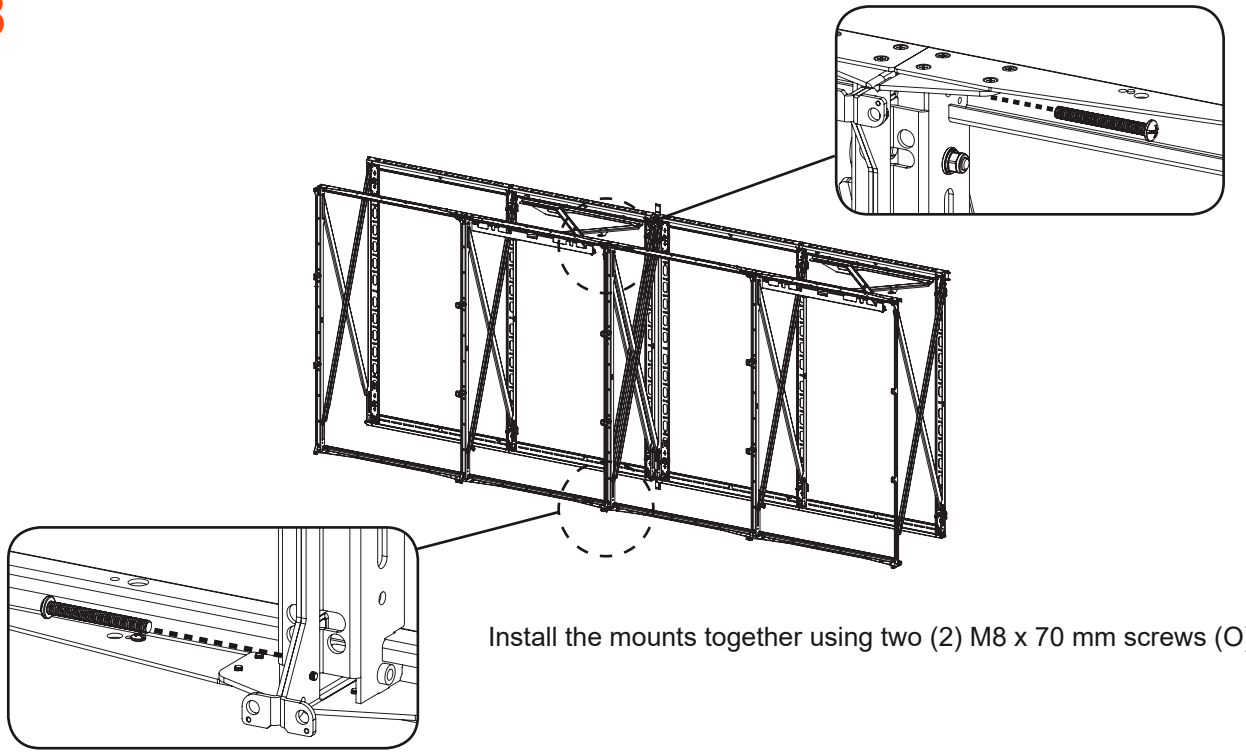

Install the mounts together using two (2) M8 x 70 mm screws (O).

14

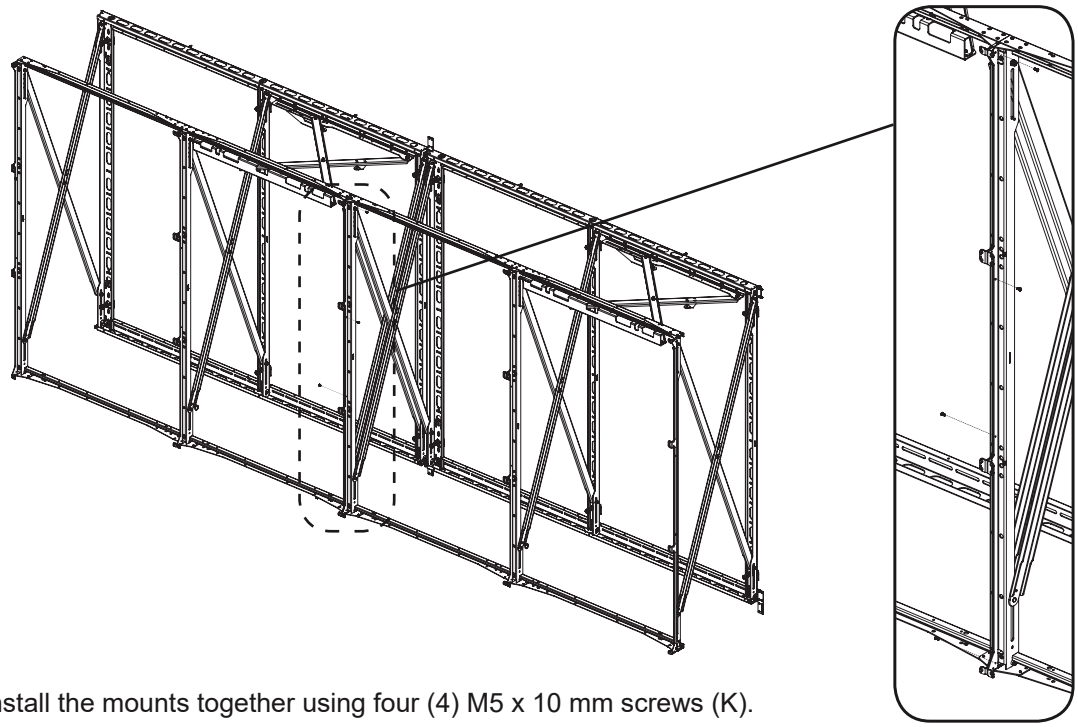

Install the mounts together using four (4) M5 x 10 mm screws (K).

15

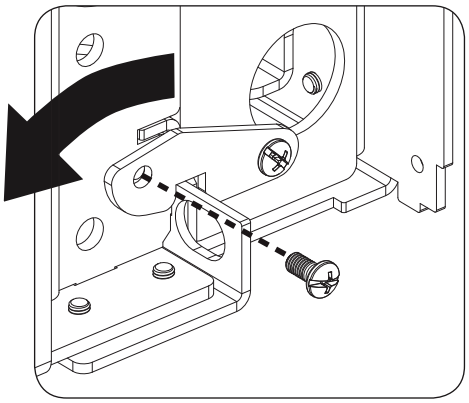

To collapse the mount and secure, remove the push pin than install two (2) M5 x 10 mm screws (K). One screw per latch.

Adjustments

See steps 6 and 9.

(GB) Subject to printing errors and technical amendments.
(NL) Drukfouten en technische wijzigingen voorbehouden.
(F) Sous réserve de fautes d'impression et de modifications techniques.
(D) Für Druckfehler übernehmen wir keine Verantwortung. Technische Änderungen vorbehalten.
(E) Reservados errores de imprenta y sujete a modificationes.
(I) Con riserva di modifiche techniche e di eventueli errori di stampa.
(P) Reserva-se a ocorrência de gralhas e de modificações técnicas.
(H) Nyomdahibák és technikai változtatások joga fenntartva.
(PL) Zastrzega się możliwość występowania błędów drukarskich i zmian technicznych.
(RUS) Vozmoøny oпibki pri pehati i texniheskie modifikacii.

Designed and engineered in the Netherlands
More information on: www.vogels.com

VOGEL'S PRODUCTS BV, HONDSRUGLAAN 93, 5628 DB EINDHOVEN, THE NETHERLANDS