RISE A154
Button remote with LCD



(GB) Subject to printing errors and technical amendments.
(NL) Drukfouten en technische wijzigingen voorbehouden.
(F) Sous réserve de fautes d'impression et de modifications techniques.
(D) Für Druckfehler übernehmen wir keine Verantwortung. Technische Änderungen vorbehalten.
(E) Reservados errores de imprenta y sujete a modificationes.
(I) Con riserva di modifiche techniche e di eventueli errori di stampa.
(P) Reserva-se a ocorrência de gralhas e de modificações técnicas.
(H) Nyomdahibák és technikai változtatások joga fenntartva.
(PL) Zastrzega się możliwość występowania błędów drukarskich i zmian technicznych.

Designed and engineered in the Netherlands. More information on: www.vogels.com

VOGEL'S PRODUCTS BV, HONDSRUGLAAN 93, 5628 DB EINDHOVEN, THE NETHERLANDS

5 YEARS GUARANTEE

EN Mounting instructions
DE Montageanleitung
FR Consignes d'installation
NL Montagevoorschrift
ES Instrucciones de montaje
IT Istruzioni di montaggio
PT Manual de montagem
EL Οδηγίες συναρμογής
SV Monteringsföreskrifter
PL Instrukcja montażu
CZE Návod k montáži
SK Návod na montáž
HU Szerelési előírás
TR Montaj kılavuzu
RO Instrucțiuni de montaj
UK Вказівки по монтажі
BG Инструкции за монтаж
JA 設置の説明書
ZH 装配说明

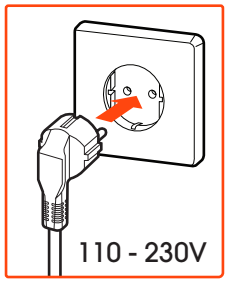

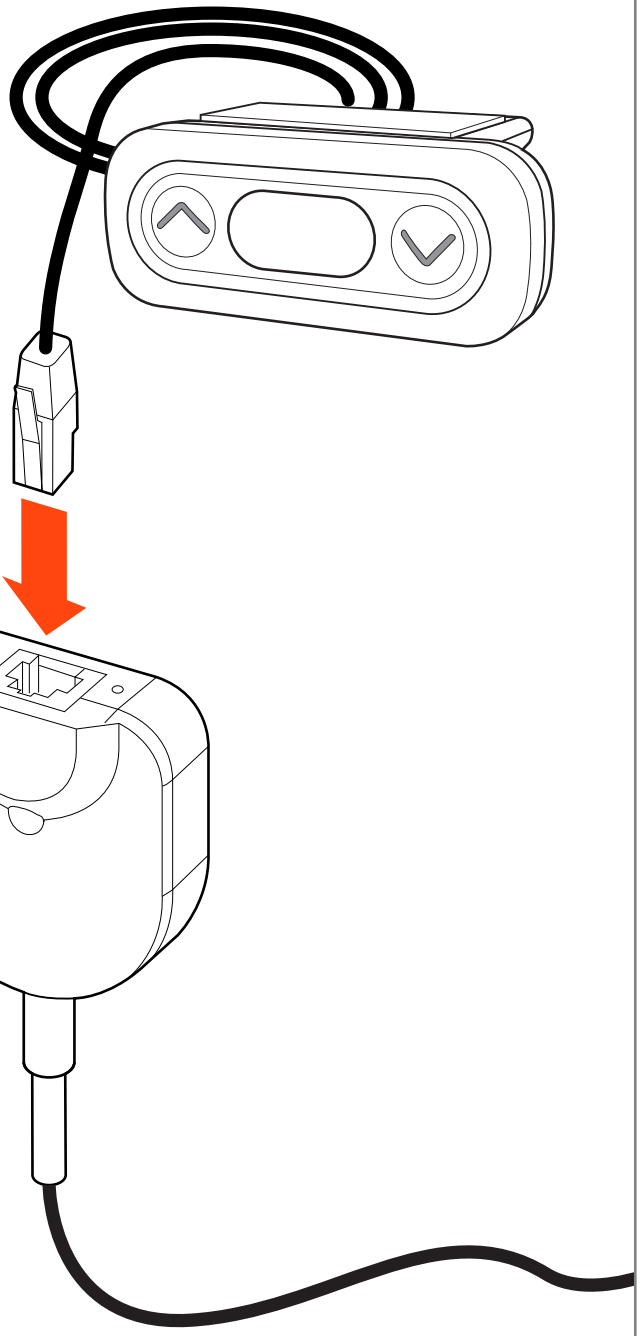

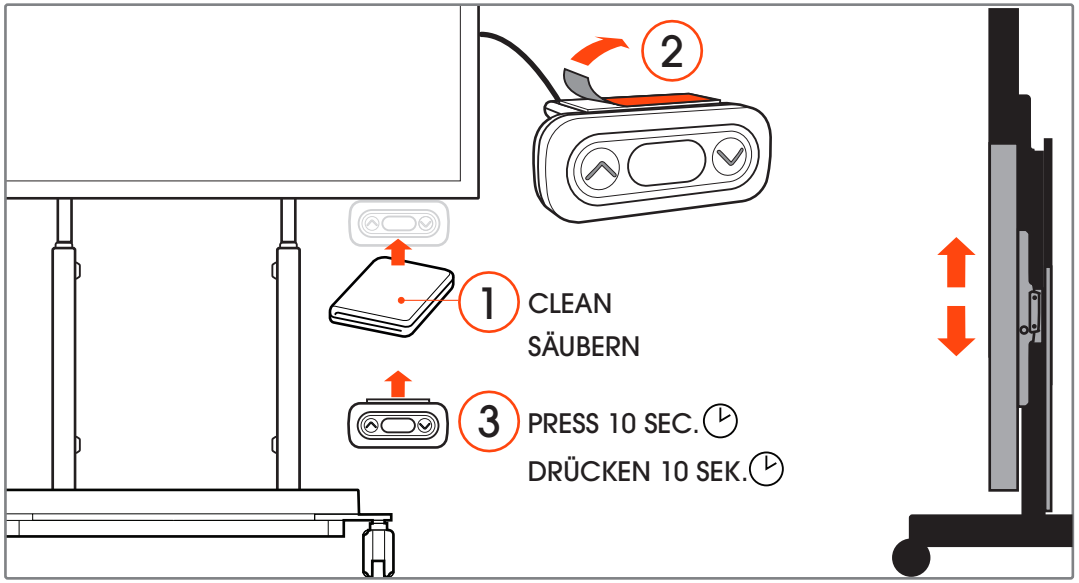

BUTTON FUNCTIONALITY

FUNCTION	REQUIRED ACTION
Going up	Press UP button
Going down	Press DOWN button
Unlock child lock	Press UP and DOWN button 2 seconds simultaneously
Lock child lock	System automatically locks 5 minutes after the last interaction
Unlock child lock permanently	Press UP and DOWN button 20 seconds simultaneously until column movement.
Reset system	1. Move system to lowest position (if possible) If not, start with point 2. 2. Press and hold DOWN button at least 10 seconds. 3. Press and hold DOWN button again and hold until system gives visual feedback, the reset is finished.
Hard System Reset	1. Unplug power cable, and all motor cables for 30+ seconds, then connect all cables again. 2. Move system to lowest position (if possible) If not, start with point 3. 3. Press and hold DOWN button at least 10 seconds. 4. Press and hold DOWN button again and hold until system gives visual feedback, the reset is finished.

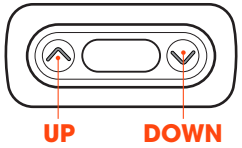

CAUTION DURING RESET:
IF ONLY ONE COLUMN MOVES DURING RESET, STOP IMMEDIATELY AND CONTACT VOGEL'S