Product data sheet

FM1564 FLOOR MOUNT

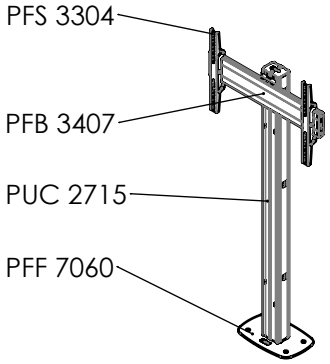

Dimensions in mm [inch]

Screen sizes:	Max. 65"
Max weight:	Max. 80kg / 176,4 lbs

Floor mounting kit:

4x NEN2316 EXPANSION BOLT M8x50
4x DIN7991 COUNTERSUNK HEAD SCREW M8x35
4x DIN7991 COUNTERSUNK HEAD SCREW M8x60
COUNTERSUNK TORX WOOD SCREW 8x80 ST.8.8

Screen mounting kit:

4x DIN933 HEXAGON HEAD BOLT M4x20 St. 8.8
4x DIN933 HEXAGON HEAD BOLT M5x20 St. 8.8
4x DIN933 HEXAGON HEAD BOLT M6x20 St. 8.8
4x DIN933 HEXAGON HEAD BOLT M8x12 St. 8.8
4x DIN933 HEXAGON HEAD BOLT M8x20 St. 8.8
4x DIN933 HEXAGON HEAD BOLT M8x35 St. 8.8
8x WASHER M5x18x2
8x WASHER M6x18x1,6
4x WASHER M8x16x1,6
4x WASHER M8x21x4

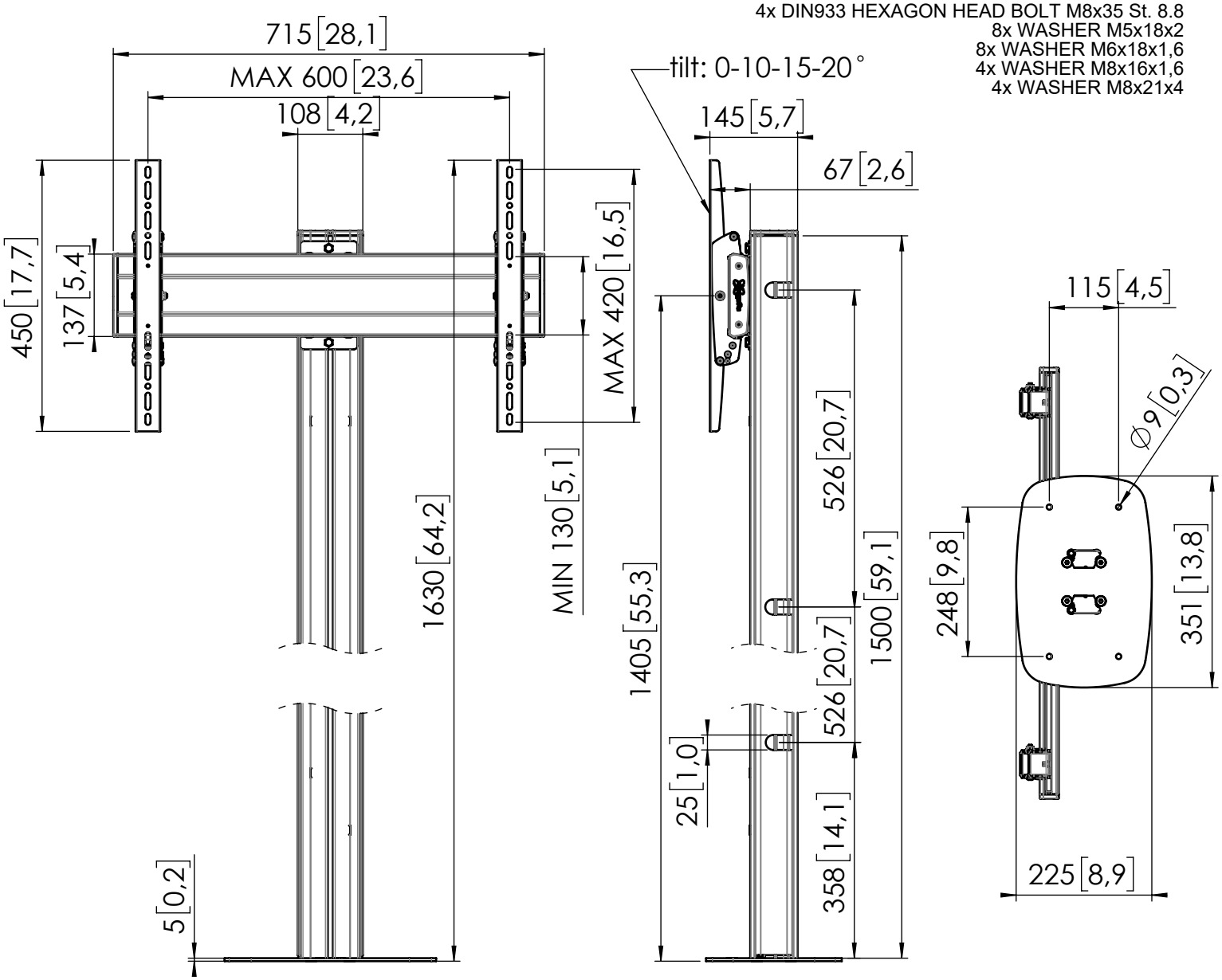

Note: This document and specifications herein are confidential and the exclusive property of Vogel's Products b.v. Neither this design nor any information contained in this drawing may be reproduced or disclosed to others without written consent of Vogel's Products b.v. The design and information will not be reproduced, copied or used, either in part or in its entirety, as the basis for the manufacture or sale of items without written permission.
Warning: Please study all instructions and illustrations carefully before installation.
Information in this document is subject to change without further notice.